DRAWING NUMBER: SS-02-06F-DNG-P001

SS-02-06F-DNG-P001

- Series
- Housing Code
- Terminal Code
- Serial Code

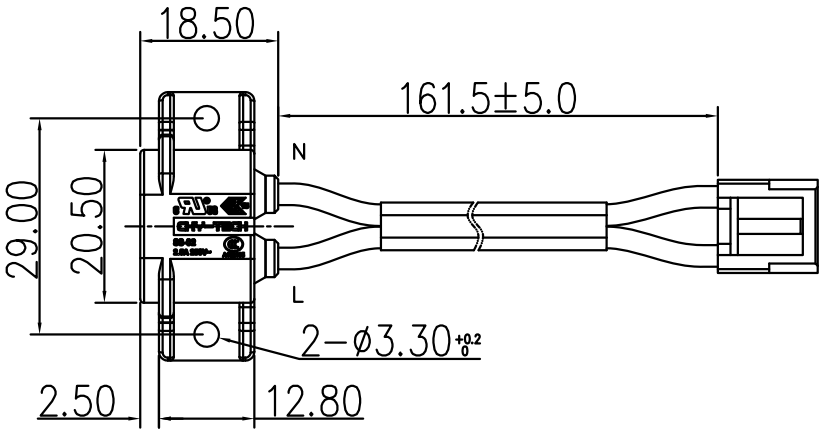

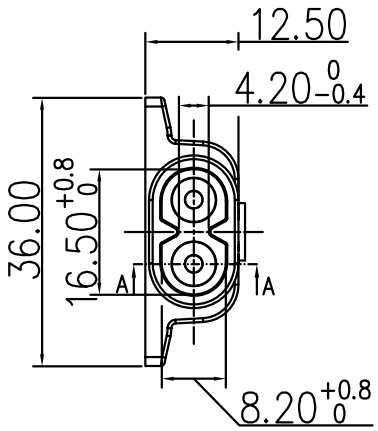

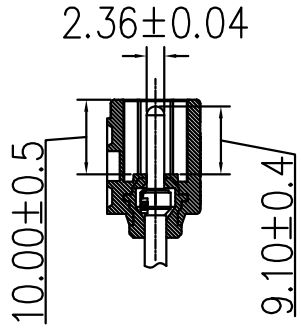

SECTION A-A

NOTES:

1. MATERIAL:

ITEM	PART NAME	P/N	DESCRIPTION	QTY
1	HOUSING	H-206FDNG	PC2330 UL94V0, BLACK	1
2	CENTER PIN	23-E10-LNC	BRASS C2680, 120μ" MIN NICKEL PLATED OVERALL.	2
3	WIRE	W-10010	UL1617,22AWG,BROWN,REIHSING/ZHIQING	1
4	WIRE	W-1001	UL1617,22AWG,BLUE,REIHSING/ZHIQING	1
5	CONNECTOR TERMINAL	WF-23963	JWT/JYC: A3963T0P(B)-2 Match JST/B2P3-VH	2
6	CONNECTOR HOUSING	WF-20013	JWT/JYC: A3963H02-3P Match JST/B2P3-VH	1
7	HEAT SHRINK TUBE	TB-10021	TUBE: ø5.0 COLOR: BLACK,WOER/CYG	1

2. PRODUCT SPECIFICATION:
   - 2.1 CONTACT RATING:
     - UL&CUL: 2.5A/250V~ 7A/125V~, SAFETY No. E249953
     - ENEC: 2.5A/250V~, SAFETY No. ENEC-03716
     - CCC: 2.5A/250V~, SAFETY No. 2021010204411972
   - 2.2 INITIAL CONTACT RESISTANCE: 30mΩ(MAX)500VDC
   - 2.3 TERMINAL TO TERMINAL & HOUSING DIELECTRIC WITHSTAND VOLTAGE: 2000VAC-1 MINUTE
   - 2.4 ELECTRICAL LIFE: 5,000 CYCLES MIN.
   - 2.5 RoHS AND HALOGEN-FREE COMPONENT.
3. PACKAGING INFORMATION: FIX THE 10 PCS FINISHED PRODUCT WITH A RIBBON AND PUT IT INTO A P.E BAG, 400PCS/CARTON.

VER	DESCRIPTION	MEMO
A9	UPDATED DRAWING	ECN 2208006, 2022/08/12 BY BX

3rd ANGLE PROJECTION

0~10 ±0.1 | 10~20 ±0.2 | 20~50 ±0.3 | ANGULAR ±5°

GENERAL TOLERANCES UNLESS SPECIFIED

SCALE	DESIGN UNITS
1:1	MM

CHY-TECH (HK) INDUSTRIAL CO.,LTD.
CHY-TECH (HUBEI) TECHNOLOGY CO., LTD.
CHY-TECH ELECTRONIC CO., LTD.

	DRAWN BY	DATE
	YANG.NH	2022/08/12
	CHECKED BY	DATE
	DAVIY	2022/08/12
	APPROVED BY	DATE
	PAUL.X	2022/08/12

TITLE: AC POWER SOCKET,MALE,IEC60320 C8,SS-02

PART NUMBER: SS-02-06F-DNG-P001

MATERIAL NO.	DOCUMENT NO.	SHEET NO.
SEE CHART	DFC-SS-02-06F-DNG-P001-ASM	1 OF 1

THIS DRAWING CONTAINS INFORMATION THAT IS PROPRIETARY TO CHY-TECH (HK) INDUSTRIAL CO., LTD. AND SHOULD NOT BE USED WITHOUT WRITTEN PERMISSION

http://www.chy-tech.com.hk
E-mail: sales@chy-tech.com.hk